BT-THEATRE 250EZ

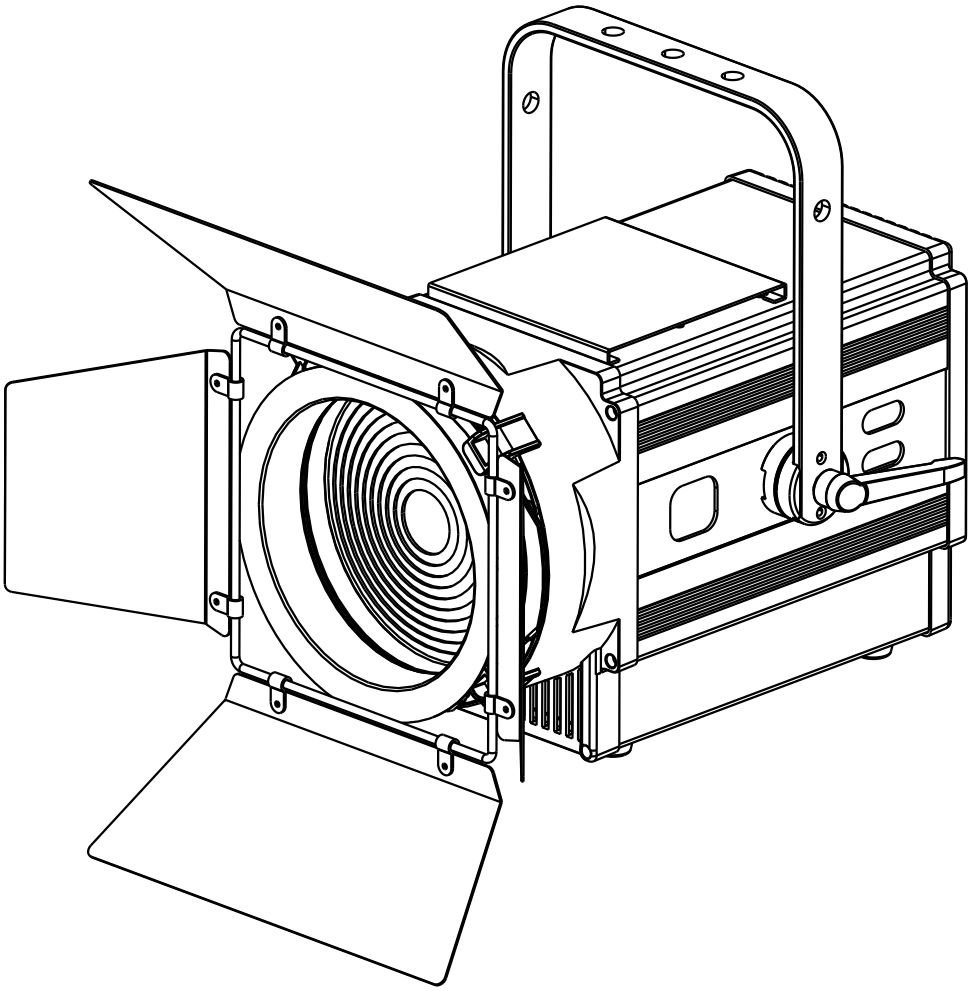

ENGLISH

Operation Manual

Other languages can be downloaded from:
WWW.BRITEQ-LIGHTING.COM

CE

BriTeQ®
LIGHT RESEARCH

Version: 1.0

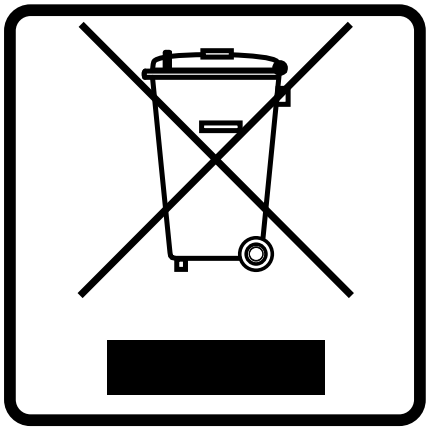

EN - DISPOSAL OF THE DEVICE
Dispose of the unit and used batteries in an environment friendly manner according to your country regulations.

FR - DÉCLASSER L'APPAREIL
Débarrassez-vous de l'appareil et des piles usagées de manière écologique Conformément aux dispositions légales de votre pays.

NL - VERWIJDEREN VAN HET APPARAAT
Verwijder het toestel en de gebruikte batterijen op een milieuvriendelijke manier conform de in uw land geldende voorschriften.

DU - ENTSORGUNG DES GERÄTS
Entsorgen Sie das Gerät und die Batterien auf umweltfreundliche Art und Weise gemäß den Vorschriften Ihres Landes.

ES - DESHACERSE DEL APARATO
Reciclar el aparato y pilas usadas de forma ecologica conforme a las disposiciones legales de su pais.

PT - COMO DESFAZER-SE DA UNIDADE
Tente reciclar a unidade e as pilhas usadas respeitando o ambiente e em conformidade com as normas vigentes no seu país.

OPERATION MANUAL

Thank you for buying this Briteq® product. To take full advantage of all possibilities and for your own safety, please read these operating instructions very carefully before you start using this unit.

FEATURES

- Extremely powerful LED theater spot with electronic 10° ~ 50° zoom.
- The incredible light output easily outperforms traditional 2KW halogen theatre projectors!!!
- 250watt LED, warm white 3200K with high CRI-factor (>92) for natural colors.
- Color frame for use of color filters and four-leaf barndoor included
- No more heavy and expensive dimmer packs needed!
- Very silent operation: temperature controlled, low noise cooling fan
- LCD-display to navigate easily through the setup menu!
- DMX-controlled: 6 different channel modes (8bit and 16bit dimming) for maximum flexibility.
- Flicker free TV-recordings thanks to 3.6kHz LED refresh rate!
- Manual dimming & zoom/focus control: for easy alignment of the projectors on the stage.
- The lamp behavior can be continuously adjusted from led to halogen.
- Four dimmer curves: linear, square, inverse square, S-curve
- In case of DMX failure you can choose between blackout and freeze mode.
- RDM-functionality for easy remote setup: DMX addressing, channel mode, …
- Lock function to avoid unwanted altering of the settings.
- Default factory settings + user settings can be saved/loaded.
- 3 & 5pin DMX in/outputs + Neutrik PowerCON in/outputs for easy daisy chaining.

BEFORE USE

- Before you start using this unit, please check if there's no transportation damage. Should there be any, do not use the device and consult your dealer first.
- **Important:** This device left our factory in perfect condition and well packaged. It is absolutely necessary for the user to strictly follow the safety instructions and warnings in this user manual. Any damage caused by mishandling is not subject to warranty. The dealer will not accept responsibility for any resulting defects or problems caused by disregarding this user manual.
- Keep this booklet in a safe place for future consultation. If you sell the fixture, be sure to add this user manual.

Check the contents:

Check that the carton contains the following items:

- English operating instructions, other languages can be downloaded from our website.
- BT-THEATRE 250EZ
- Four-leaf barndoor
- Color frame
- PowerCon® mains cable

SAFETY INSTRUCTIONS:

CAUTION
RISK OF ELECTRIC SHOCK
DO NOT OPEN

CAUTION: To reduce the risk of electric shock, do not remove the top cover. No user-serviceable parts inside. Refer servicing to qualified service personnel only.

The lightning flash with arrowhead symbol within the equilateral triangle is intended to alert the use or the presence of un-insulated “dangerous voltage” within the product’s enclosure that may be of sufficient magnitude to constitute a risk of electric shock.

The exclamation point within the equilateral triangle is intended to alert the user to the presence of important operation and maintenance (servicing) instructions in the literature accompanying this appliance.

This symbol means: indoor use only

This symbol means: Read instructions

This symbol determines: the minimum distance from lighted objects. The minimum distance between light-output and the illuminated surface must be more than 1 meters

RISK GROUP 2
CAUTION:
Do not stare at operating lamp

CAUTION: Do not stare at operating lamp.
May be harmful to the eyes.

- To protect the environment, please try to recycle the packing material as much as possible.
- To prevent fire or shock hazard, do not expose this appliance to rain or moisture.
- To avoid condensation to be formed inside, allow the unit to adapt to the surrounding temperatures when bringing it into a warm room after transport. Condense sometimes prevents the unit from working at full performance or may even cause damages.
- This unit is for indoor use only.
- Don’t place metal objects or spill liquid inside the unit. Electric shock or malfunction may result. If a foreign object enters the unit, immediately disconnect the mains power.
- Locate the fixture in a well ventilated spot, away from any flammable materials and/or liquids. The fixture must be fixed at least 50cm from surrounding walls.
- Don’t cover any ventilation openings as this may result in overheating.
- Prevent use in dusty environments and clean the unit regularly.
- Keep the unit away from children.
- Inexperienced persons should not operate this device.
- Maximum safe ambient temperature is 40°C. Don’t use this unit at higher ambient temperatures.
- Make sure the area below the installation place is free from unwanted persons during rigging, de-rigging and servicing.
- Allow the device about 10 minutes to cool down before to start servicing.
- Always unplug the unit when it is not used for a longer time or before to start servicing.
- The electrical installation should be carried out by qualified personal only, according to the regulations for electrical and mechanical safety in your country.
- Check that the available voltage is not higher than the one stated on the unit.
- The power cord should always be in perfect condition. Switch the unit immediately off when the power cord is squashed or damaged. It must be replaced by the manufacturer, its service agent or similarly qualified persons in order to avoid a hazard.
- Never let the power-cord come into contact with other cables!
- This fixture must be earthed in order to comply with safety regulations.
- Don’t connect the unit to any dimmer pack.
- Always use an appropriate and certified safety cable when installing the unit.
- In order to prevent electric shock, do not open the cover. Apart from the mains fuse there are no user serviceable parts inside.
- **Never** repair a fuse or bypass the fuse holder. **Always** replace a damaged fuse with a fuse of the same type and electrical specifications!
- In the event of serious operating problems, stop using the fixture and contact your dealer immediately.
- The housing and the lenses must be replaced if they are visibly damaged.
- Please use the original packing when the device is to be transported.
- Due to safety reasons it is prohibited to make unauthorized modifications to the unit.

Important: Never look directly into the light source! Don’t use the effect in the presence of persons suffering from epilepsy.

DESCRIPTION:

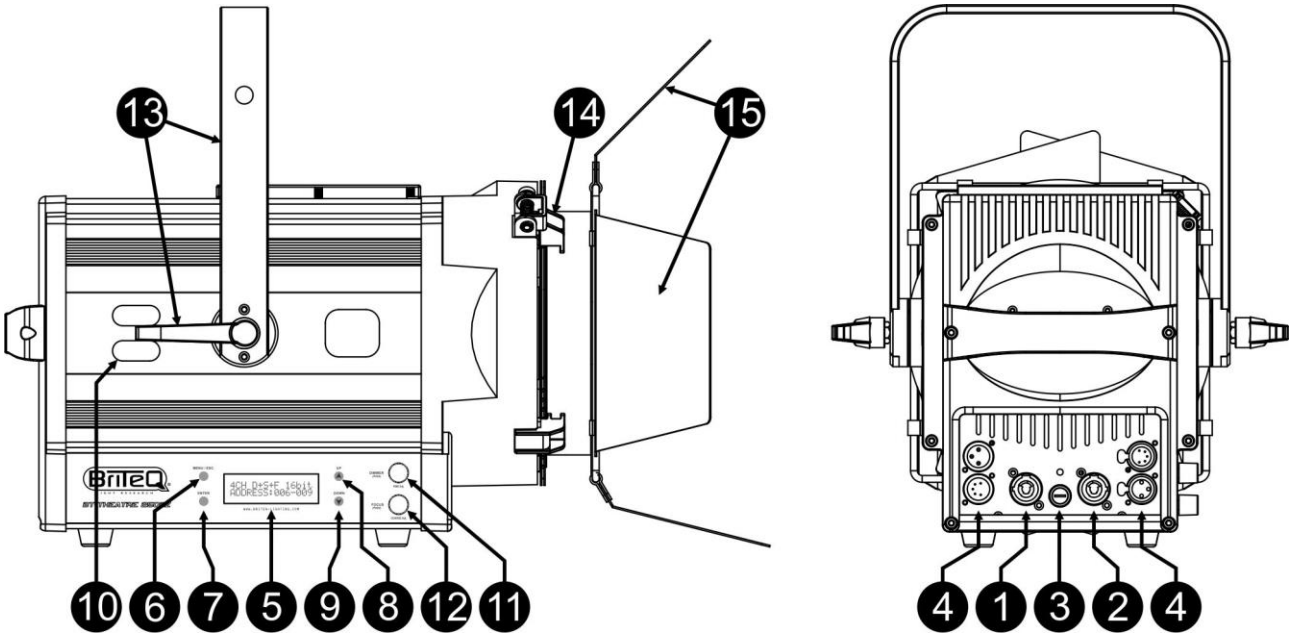

1. **MAINS INPUT:** equipped with original Neutrik PowerCON®. Connect the supplied mains cable or any PowerCon® extension cable here.
2. **MAINS OUTPUT:** used to daisy chain the power to several other projectors. Always pay attention to the maximum load while adding projectors! Special Multi cables (PowerCON® + DMX XLR-cables are optionally available: see our website!)
3. **MAINS FUSE:** protects the unit in case of electrical problems, always use the prescribed fuse!
4. **DMX IN/OUT:** both 3pin and 5pin in/outputs are available to daisy chain the projector with other units that will be controlled by a DMX-controller.
5. **DISPLAY:** shows the various menus and the selected functions:
6. **MENU-button:** used to enter and exit the setup menu or to jump to a higher level in the setup menu.
7. **ENTER-button:** used to select a menu option or confirm a setting.
8. **▲-button:** used to go to the previous menu option or to increase a parameter value.
9. **▼-button:** used to go to the next menu option or to decrease a parameter value.
10. **SAFETY EYE:** used to attach a safety cable when the unit is rigged, see paragraph “overhead rigging”.
11. **DIMMER KNOB:** (fine adjustment) press the knob to override the DMX-input and adjust the light output manually. This feature can be used to install and align the projector on the stage without the need for a DMX-controller. Press the knob again to return to DMX-control.
12. **FOCUS KNOB:** (coarse adjustment) press the knob to override the DMX-input and adjust the beam angle manually. This feature can be used to install and align the projector on the stage without the need for a DMX-controller. Press the knob again to return to DMX-control.
    Remark: *Press the FOCUS KNOB during 5 seconds to activate a hidden menu where you can reset and/or calibrate the Focus system. See chapter “OTHER SETUP FUNCTIONS” for more information.*
13. **HANGING BRACKET:** with a knob on both sides to fasten the unit in the desired position. you can use the hole in the center of the bracket to fix a hook or truss clamp.
14. **LOCKING CLIP:** The clip is used to keep the barndoor and color frame in place. Press the clip aside to open it.
15. **BARN DOORS:** they facilitate shaping of the beam of light from the fixture, and prevent the distinctive scatter of light created by the Fresnel lens from spilling into areas where it is not wanted, such as the eyes of audience members. Just rotate the barndoor leafs in the desired position.

OVERHEAD RIGGING

<u>Important:</u> The installation must be carried out by qualified service personal only. Improper installation can result in serious injuries and/or damage to property. Overhead rigging requires extensive experience! Working load limits should be respected, certified installation materials should be used, the installed device should be inspected regularly for safety.

- Make sure the area below the installation place is free from unwanted persons during rigging, de-rigging and servicing.
- Locate the fixture in a well ventilated spot, far away from any flammable materials and/or liquids. The fixture must be fixed **at least 50cm** from surrounding walls.
- The device should be installed out of reach of people and outside areas where persons may walk by or be seated.
- Before rigging make sure that the installation area can hold a minimum point load of 10times the device's weight.
- Always use a certified safety cable that can hold 12times the weight of the device when installing the unit. This secondary safety attachment should be installed in a way that no part of the installation can drop more than 20cm if the main attachment fails.

- The device should be well fixed; a free-swinging mounting is dangerous and may not be considered!
- Don't cover any ventilation openings as this may result in overheating.
- The operator has to make sure that the safety-relating and machine-technical installations are approved by an expert before using them for the first time. The installations should be inspected every year by a skilled person to be sure that safety is still optimal.

SETUP MENU / HOW TO SETUP

With the setup menu you can fully configure the projector. All settings are preserved when the unit is disconnected from the mains.

<u>General instructions for setup.</u>

The SETUP-menu has three logically structured levels, see the menu structure.

- Press the [MENU] button to enter the SETUP-menu.
- Press the ▲/▼ buttons to browse the different functions of the setup menu until the required function is shown on the display.
- Press the [ENTER] button to access the function and change its parameters.
- Use ▲/▼ buttons to change the value.
- Press the [ENTER] button again confirm.
- To jump to a higher menu level: press the [MENU] button.
- To exit the SETUP-menu: press the [MENU] button several times until the standard display is shown.

Remark: *to make things easier you will always enter the SETUP-menu at the last used location.*

[SET CONFIG > DMX-Address]

Used to set the desired DMX-address. *(on RDM-compatible controllers this option can be set remotely)*

- Press the ▲/▼ buttons until the desired function is showing on the display.
- Press the [ENTER] button: the values can be changed
- Use ▲/▼ buttons to select the desired DMX512 address. The last occupied DMX-address is also shown: makes it easier to set the address of the next unit in the chain.
- Once the correct address shows on the display, press the [ENTER] button to confirm.

[SET CONFIG > CHAN. Mode]

Used to set the desired channel mode. *(on RDM-compatible controllers this option can be set remotely)*

- Press the ▲/▼ buttons until the desired function is showing on the display.
- Press the [ENTER] button: the values can be changed
- Use ▲/▼ buttons to select the desired mode:
  - **[1CH DIM 8bit] :** 1 channel mode with 8bit dimmer. You can set a fixed beam angle with the function [FOCUS PRESET] of the setup menu.
  - **[2CH D+S 8bit] :** 2 channel mode with 8bit dimmer and strobe. You can set a fixed beam angle with the function [FOCUS PRESET] of the setup menu.
  - **[3CH D+S+F 8bit] :** 3 channel mode with 8bit dimmer, strobe and focus.
  - **[2CH DIM 16bit] :** 2 channel mode with 16bit dimmer. You can set a fixed beam angle with the function [FOCUS PRESET] of the setup menu.

- **[3CH D+S 16bit] :** 3 channel mode with 16bit dimmer and strobe. You can set a fixed beam angle with the function [FOCUS PRESET] of the setup menu.
- **[4CH D+S+F 16bit] :** 4 channel mode with 16bit dimmer, strobe and focus.

- Once the correct option shows on the display, press the [ENTER] button to confirm.

LEVEL 1	LEVEL 2	LEVEL 3	
SET CONFIG	DMX-Address	001 - XXX	
	CHANNEL Mode	1CH DIM 8bit	
		2CH D+S 8bit	
		3CH D+S+F 8bit	
		2CH DIM 16bit	
		3CH D+S 16bit	
		4CH D+S+F 16bit	
	FIXTURE Set	NO DMX Mode	Blackout
			Freeze
		STANDBY	OFF, 01M-99M
		DIM Curve	Linear
			Square
			Inv. Square
			S-Curve
		Dimmer Speed	000 – 255 (0-2000ms)
		FOCUS PRESET	000 - 255
		FAN Set	Auto High Low
	DISPLAY Set	Backlight	ON, 02-60M
		AUTO LOCK	ON /OFF
		noDMX blink	ON /OFF
		Temp C/F	Celcius/Fahrenheit
	DEFAULTS	Factory Settings	LOAD ?
		USER Settings	LOAD / SAVE ?
INFORMATION	TIMERS	Total LED Hours	xxxx Hrs
		Last JOB	xxxx Hrs
	LED Temp.	xxx °C / °F	
	ERROR info	xxxxxxxx	
	Model Name	BT-THEATRE 250EZ	
	Firmware V.	V x.xx	

[SET CONFIG > FIXTURE Set]

Used to configure different parameters if the projector.

[NO DMX Mode]

Used to set how the projector reacts when the DMX-signal disappears.

- Press the ▲/▼ buttons until the desired function is showing on the display.
- Press the [ENTER] button: the values can be changed
- Use ▲/▼ buttons to select the desired mode:
  - **BLACKOUT:** output turns black while no DMX is detected.
  - **FREEZE:** output based on the last valid DMX-signal is kept on the projector.
- Once the correct option shows on the display, press the [ENTER] button to confirm.

Note: *as soon as the input detects a DMX-signal, blackout or freeze mode will be cancelled.*

[STANDBY]

To save energy the projector goes in sleep mode after a certain time when no DMX is detected.

- Press the ▲/▼ buttons until the desired function is showing on the display.
- Press the [ENTER] button: the values can be changed
- Use ▲/▼ buttons to select one of these options:
  - **[OFF]** standby function not used
  - **[0xxM]** The time (from 001 to 099 minutes) before the standby function is activated.
- Press the [ENTER] button to confirm.

Remark: *when during standby mode a DMX-signal is detected, the projector first performs a reset.*

[DIM Curve]

Used to set the dimmer curve of the master dimmer.

- Press the ▲/▼ buttons until the desired function is showing on the display.
- Press the [ENTER] button: the values can be changed
- Use ▲/▼ buttons to selected the desired curve:

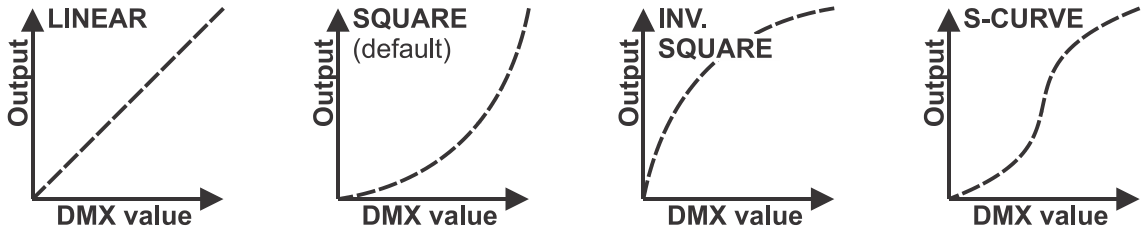

- Once you have the desired curve, press the [ENTER] button to save it.

[Dimmer Speed]

Used to set the speed (smoothness) of the dimmer continuously.

- Press the ▲/▼ buttons until the desired function is showing on the display.
- Press the [ENTER] button: the values can be changed
- Use ▲/▼ buttons to select the desired speed:
  - **000 (0ms):** The projector follows the instructions instantly, no delay (also called [LED behavior]).
    …
  - **255 (2000ms):** The projector imitates the behavior of a halogen lamp (slower reaction time).
- Once the desired value shows on the display, press the [ENTER] button to confirm.

Remark: *The default value (100 or 440ms) is the most realistic value to imitate "halogen lamp" behavior. At the same time the light output will be instantaneous while pushing a flash button on your DMX-controller.*

[FOCUS Preset]

Used to set the standard beam angle when a DMX-mode without focus control is selected.

- Press the ▲/▼ buttons until the desired function is showing on the display.
- Press the [ENTER] button: the values can be changed
- The light output is set to maximum while the current focus value is shown on the display.
- Use ▲/▼ buttons to select the desired focus preset between [000] (narrow beam) and [255] (wide beam).
- Once the correct option shows on the display, press the [ENTER] button to confirm.

[FAN Set]

On some occasions fan noise should be reduced to a minimum. Therefore you can set three different fan speed modes.

- Press the ▲/▼ buttons until the desired function is showing on the display.
- Press the [ENTER] button: the values can be changed
- Use ▲/▼ buttons to select one of these options:
  - **[Auto]:** the fan speed will be automatically adjusted to always have the best balance between fan noise and performance (light output). This is the best setting for use in theatres, conference rooms, …
  - **[Low]:** the fan speed will always be low to reduce fan noise to a minimum. However this means that the LED temperature could become too high: in that case the LED current will be reduced automatically to protect the LED. Light output will also be lower.
  - **[High]:** the LED will be well cooled so maximum light output can be guaranteed under all conditions. However this means that fan noise will be higher than usual.
- Press the [ENTER] button to confirm.

[SET CONFIG > DISPLAY Set]

This level contains all display related settings.

[Backlight]

Used to adjust how long the display stays lit after the last time it was used.

- Press the ▲/▼ buttons until the desired function is showing on the display.
- Press the [ENTER] button: the values can be changed
- Use ▲/▼ buttons to select one of these options:
  - **[ON]:** display is always lit.
  - **[0xxM]:** you can set the number of minutes before the display turns dark after it was last used.
- Press the [ENTER] button to confirm.

[AUTO LOCK]

Used to lock the setup menu against unwanted altering of the settings.

- Press the ▲/▼ buttons until the desired function is showing on the display.
- Press the [ENTER] button: the values can be changed
- Use ▲/▼ buttons to select one of these options:
  - **[OFF]:** The setup menu can be used at any time.
  - **[ON]:** After a short time the setup menu locks automatically, the display shows " **LOCKED ******* ". Unlock the display by pressing the buttons in this order: **UP, DOWN, UP, DOWN, ENTER**.

[noDMX blink]

Used to select of the display should blink or not when the DMX signal was lost.

- Press the ▲/▼ buttons until the desired function is showing on the display.
- Press the [ENTER] button: the values can be changed
- Use ▲/▼ buttons to toggle between ON and OFF.
- Press the [ENTER] button to confirm.

[Temp C/F]

Used to select if the LED-temperature is shown in degrees Celcius [°C] or Fahrenheit [°F].

- Press the ▲/▼ buttons until the desired function is showing on the display.
- Press the [ENTER] button: the values can be changed
- Use ▲/▼ buttons to select one of these options:
  - **[Celcius]:** LED-temperature is shown in degrees Celcius [°C].
  - **[Fahrenheit]:** LED-temperature is shown in degrees Fahrenheit [°F].
- Press the [ENTER] button to confirm.

[SET CONFIG > DEFAULTS]

This is your emergency exit if you really messed up the settings: just return to the [Factory Settings] (Factory Settings). Also a user setting can be saved/loaded.

- Press the ▲/▼ buttons until the desired function is showing on the display.
- Press the [ENTER] button: the values can be changed
- Use ▲/▼ buttons to select one of these options:
  - **[Factory Settings]:** standard factory settings.
  - **[USER Def.]:** you can adapt the factory settings and save the new parameters as your personal USER-settings.
- Press the [ENTER] button:
  - **[Factory Settings] was selected:** the display shows "LOAD"
    - Press the [ENTER] button and use ▲/▼ buttons to confirm YES / NO
    - Press the [ENTER] button to confirm.
  - **[USER Def.] was selected:** the display shows "LOAD"
    - Use ◄/► buttons to select LOAD / SAVE
    - Press the [ENTER] button and use ▲/▼ buttons to confirm YES / NO
    - Press the [ENTER] button to confirm.
      - **[SAVE] was selected:** the current settings of the setup menu are saved to memory.
      - **[LOAD] was selected:** the previously saved settings are loaded.

Set of Factory default settings:

PARAMETER name	FACTORY defaults	USER defaults
[CHANNEL mode]	3CH D+S+F 8bit	Current setting in the menu
[NO DMX mode]	Freeze	Current setting in the menu
[STANDBY]	15 M	Current setting in the menu
[DIM Curve]	Square	Current setting in the menu
[Dimmer Speed]	100 (440ms)	Current setting in the menu
[FAN Set]	Auto	Current setting in the menu
[Backlight]	5 min.	Current setting in the menu
[AUTO LOCK] Menu	OFF	Current setting in the menu
[no DMX blink] display	ON	Current setting in the menu
[Temp C/F]	Celcius	Current setting in the menu

[INFORMATION > TIMERS]

Shows how long the projector was used.

- Press the ▲/▼ buttons until the desired function is showing on the display.
- Press the [ENTER] button: the values can be changed
- Use ▲/▼ buttons to select one of these options:
  - **[Total LED hours]:** The total time the LED was used since it was used for the 1st time, non-resettable.
  - **[Last JOB]:** The time the unit was used on the last job.
    This timer can be reset by pressing the ▲/▼ buttons for about 5 seconds.
- Press the [ENTER] button to confirm.

[INFORMATION > LED Temp.]

Shows the actual temperature of the LEDs.

- Press the ▲/▼ buttons until the desired function is showing on the display.
- Press the [ENTER] button: the LED temperature is shown.

[INFORMATION > ERROR info]

Shows information about eventual errors.

- Press the ▲/▼ buttons until the desired function is showing on the display.
- Press the [ENTER] button:
  - **No errors:** display shows [NONE]
  - **Errors to report:** the error will be shown on the display so you can take action.

[INFORMATION > Model Name]

Shows the name of the projector.

- Press the ▲/▼ buttons until the desired function is showing on the display.
- Press the [ENTER] button: the display shows the name of the unit.

[INFORMATION > Firmware V.]

Shows the current firmware version in the projector.

- Press the ▲/▼ buttons until the desired function is showing on the display.
- Press the [ENTER] button: the display shows the firmware version.

Note: *The firmware of this unit can be upgraded using our special "Firmware Updater 2" (separately available from Briteq). More information about this can be found in the user manual of the firmware updater or our website:* ***https://briteq-lighting.com/firmware-updater-2***

OTHER SETUP FUNCTIONS

FOCUS RESET

There are 2 ways to activate the FOCUS RESET function:

- **MANUAL RESET:** press the FOCUS KNOB for more than 5 seconds to open a hidden menu.
  The display shows [FOCUS RESET]: press the [ENTER] button to start the reset.
- **REMOTE RESET:** you can activate the FOCUS RESET by DMX:
  - **[3CH D+S+F 8bit] DMX-Mode selected:**
    Remote "Focus reset" will be activated when the following DMX-values are received during 5seconds: CH1 = 001 * CH2 = 002 * CH3 = 003.
  - **[4CH D+S+F 16bit] DMX-Mode selected:**
    Remote "Focus reset" will be activated when the following DMX-values are received during 5seconds: CH1 = 001 * CH3 = 002 * CH4 = 003.

FOCUS CALIBRATION

Press the FOCUS KNOB for more than 5 seconds to open a hidden menu.

- The display shows [FOCUS RESET]
- Press the ▲/▼ buttons until the display shows: [CALIBRATE FOCUS]
- Press the [ENTER] button to activate: the light output will be set to maximum.
- Use ▲/▼ buttons to adjust the calibration of the Focus.
- Press the [ENTER] button to confirm.

ELECTRICAL INSTALLATION

<u>Important:</u> The electrical installation should be carried out by qualified personal only, according to the regulations for electrical and mechanical safety in your country.

<u>Electrical installation for two or more units in DMX-mode:</u>

- The DMX-protocol is a widely used high speed signal to control intelligent light equipment. You need to "daisy chain" your DMX controller and all the connected units.
- Pin layout XLR-3pin: Pin1 = GND ~ Pin2 = Negative signal (-) ~ Pin3 = Positive signal (+)
- To prevent strange behavior of the light effects, due to interferences, you must use a 90Ω to 120Ω terminator at the end of the chain. Never use Y-splitter cables, this simply won't work!
- Make sure that all units are connected to the mains.
- Each unit in the chain needs to have its proper starting address so it knows which commands from the controller it has to decode.

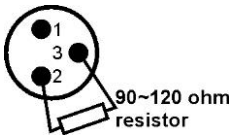

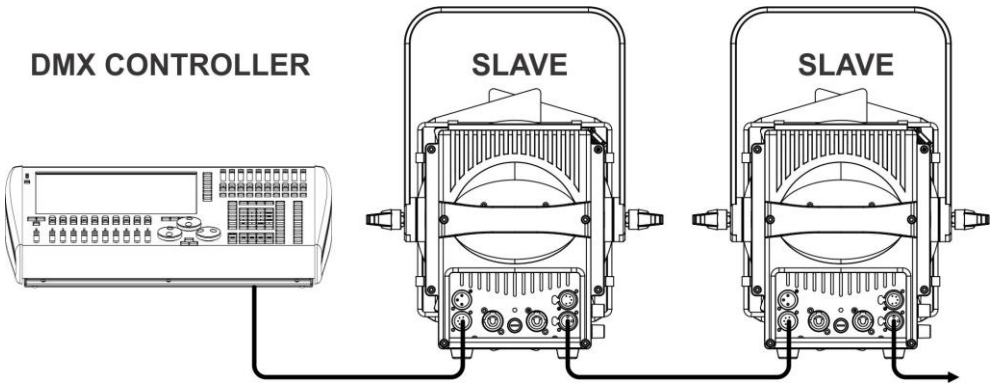

RDM FUNCTIONS / REMOTE SETUP

RDM means "**R**emote **D**evice **M**anagement". This projector works with a brief set of RDM-functions which means that it can setup a bi-directional communication with an RDM-compatible DMX-controller. Some of these functions are briefly explained below, others will be added in the future.

- The DMX-controller sends out a "discovery command", all RDM devices respond and send their unique device ID.
- The DMX-controller asks each RDM device for some basic data so it knows which devices are connected. The projector will respond:
  - **Device name:** BT-THEATRE 250EZ
  - **Manufacturer:** Briteq®
  - **Category:** LED Dimmer
  - **Firmware:** x.x.x.x (firmware version of the projector)
  - **DMX address:** xxx (current DMX start address of the projector)
  - **DMX footprint:** xx (number of DMX-channels used by the projector)
  - **Personality:** xx (current personality [or DMX-working mode] used by the projectors)
- The DMX-controller can send certain commands to each RDM device which allow remote setup of the units. Thanks to this the projector can be setup remotely.

The following functions can be managed remotely:

No more need to take a ladder and set all units one by one!

- **DMX START ADDRESS:** The start address can be set remotely from 001 to xxx.
- **PERSONALITY:** The DMX working mode (DMX-chart) can be set remotely.

These 2 functions make it possible to prepare a complete DMX-patch of all projectors on the DMX-controller and send these data to all projectors at once. More functions will be added later.

OPERATING INSTRUCTIONS

Note: when the projector is switched on the display shows "UPDATE WAIT …" This message informs you that IF you want to upgrade the firmware, you should do it while this message is shown on the display. For normal use you can ignore this message completely.

A. Standalone 1unit – Manual operation:

- Just connect the projector to the mains.
- In the setup menu the option [NO DMX Mode] should be set to [FREEZE]
- Adjust the [DIMMER] and [FOCUS] knobs
- Refer to points 11 + 12 in chapter DESCRIPTION for more information.

B. Controlled by universal DMX-controller:

- Connect all units together. Refer to the chapter "Electrical installation for two or more units in DMX-mode" to learn how to do this (don't forget to address all units properly!)
- Connect all units to the mains and turn on the DMX controller.

Since each unit has its own DMX-address, you can control them individually. Remember that each unit can use a different number DMX-channels, depending on the DMX-mode you have selected in the menu. See the different DMX charts:

DMX Chart for the [1CH DIM 8bit] DMX-Mode

Channel:	Value:	Function:	Remarks:
1	000-255	**Master dimmer (0-100%)**	

DMX Chart for the [2CH D+S 8bit] DMX-Mode

Channel:	Value:	Function:	Remarks:
1	000-255	**Master dimmer (0-100%)**	
2	000-005	**Open**	No strobe
	006-125	**Normal strobe (slow→fast)**	006 = slow 125 = fast
	126-135	**Open**	No strobe
	136-255	**Random strobe (slow→fast)**	136 = slow 225 = fast

DMX Chart for the [3CH D+S+F 8bit] DMX-Mode

Channel:	Value:	Function:	Remarks:
1	000-255	**Master dimmer (0-100%)**	
2	000-005	**Open**	No strobe
	006-125	**Normal strobe (slow→fast)**	006 = slow 125 = fast
	126-135	**Open**	No strobe
	136-255	**Random strobe (slow→fast)**	136 = slow 225 = fast
3	000-255	**Focus**	Small → large beam

Remark: *Remote "Focus reset" will be activated when the following DMX-values are received during 5seconds: CH1 = 001 * CH2 = 002 * CH3 = 003*

DMX Chart for the [2CH DIM 16bit] DMX-Mode

Channel:	Value:	Function:	Remarks:
1	000-255	**Master dimmer coarse**	
2	000-255	**Master dimmer fine**	

DMX Chart for the [3CH D+S 16bit] DMX-Mode

Channel:	Value:	Function:	Remarks:
1	000-255	**Master dimmer coarse**	
2	000-255	**Master dimmer fine**	
3	000-005	**Open**	No strobe
	006-125	**Normal strobe (slow→fast)**	006 = slow 125 = fast
	126-135	**Open**	No strobe
	136-255	**Random strobe (slow→fast)**	136 = slow 225 = fast

DMX Chart for the [4CH D+S+F 16bit] DMX-Mode

Channel:	Value:	Function:	Remarks:
1	000-255	**Master dimmer coarse**	
2	000-255	**Master dimmer fine**	
3	000-005	**Open**	No strobe
	006-125	**Normal strobe (slow→fast)**	006 = slow 125 = fast
	126-135	**Open**	No strobe
	136-255	**Random strobe (slow→fast)**	136 = slow 225 = fast
4	000-255	**Focus**	Small → large beam

Remark: *Remote "Focus reset" will be activated when the following DMX-values are received during 5seconds: CH1 = 001 * CH3 = 002 * CH4 = 003*

MAINTENANCE

- Make sure the area below the installation place is free from unwanted persons during servicing.
- Switch off the unit, unplug the mains cable and wait until the unit has been cooled down.

During inspection the following points should be checked:

- All screws used for installing the device and any of its parts should be tightly fastened and may not be corroded.
- Housings, fixations and installations spots (ceiling, truss, suspensions) should be totally free from any deformation.
- When an optical lens is visibly damaged due to cracks or deep scratches, it must be replaced.
- The mains cables must be in impeccable condition and should be replaced immediately when even a small problem is detected.
- In order to protect the device from overheat the cooling fans (if any) and ventilation openings should be cleaned monthly.
- The interior of the device should be cleaned annually using a vacuum cleaner or air-jet.
- The cleaning of internal and external optical lenses and/or mirrors must be carried out periodically to optimize light output. Cleaning frequency depends on the environment in which the fixture operates: damp, smoky or particularly dirty surroundings can cause greater accumulation of dirt on the unit's optics.
    - Clean with a soft cloth using normal glass cleaning products.
    - Always dry the parts carefully.

Attention: We strongly recommend internal cleaning to be carried out by qualified personnel!

SPECIFICATIONS

This unit is radio-interference suppressed. This product meets the requirements of the current European and national guidelines. Conformity has been established and the relevant statements and documents have been deposited by the manufacturer.

Mains Input:	AC 110 - 240V, 50/60Hz
Power consumption:	260 Watts
Power connections:	PowerCon input + PowerCon output
DMX connections:	3&5 pin-XLR male / female inputs + outputs
Lamp:	LED, 250W Warm white CCT 3000-3200K
Beam Angle:	electronic zoom 10° ~ 50°
IP-Rating:	IP20
Size:	See drawing
Weight:	9 kg

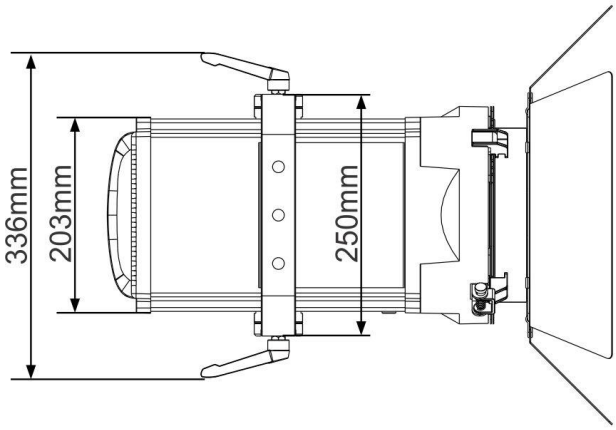

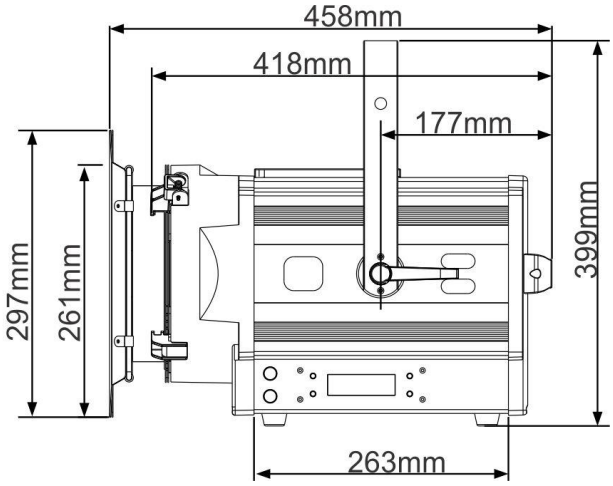

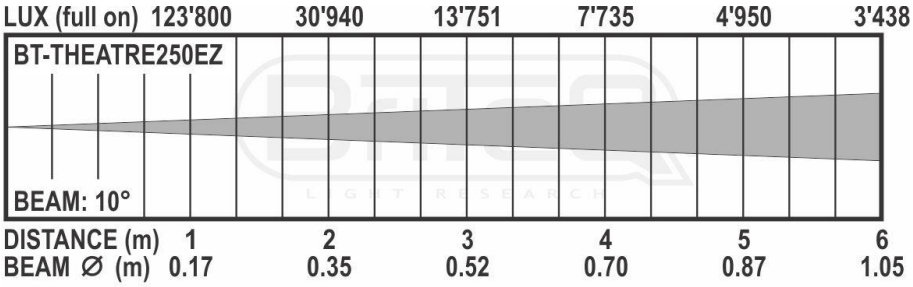

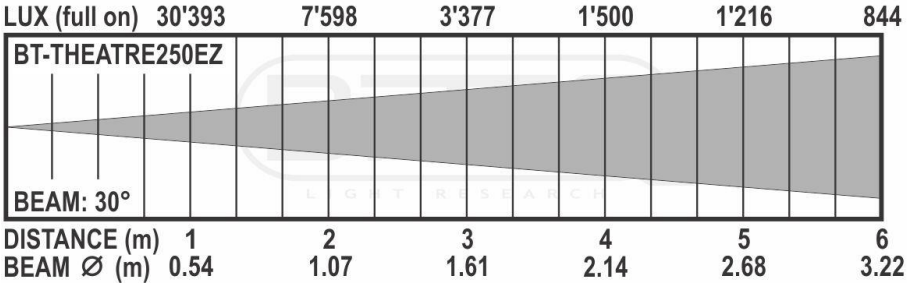

The information might be modified without prior notice
You can download the latest version of this user manual on our website: www.briteq-lighting.com

MAILING LIST

EN: Subscribe today to our mailing list for the latest product news!
FR: Inscrivez-vous à notre liste de distribution si vous souhaitez suivre l'actualité de nos produits!
NL: Abonneer je vandaag nog op onze mailinglijst en ontvang ons laatste product nieuws!
DE: Abonnieren Sie unseren Newsletter und erhalten Sie aktuelle Produktinformationen!
ES: Suscríbete hoy a nuestra lista de correo para recibir las últimas noticias!

WWW.BRITEQ-LIGHTING.COM

Copyright © 2017 by BEGLEC NV
't Hofveld 2C ~ B1702 Groot-Bijgaarden ~ Belgium
Reproduction or publication of the content in any manner, without express permission of the publisher, is prohibited.